Residual Barter Networks and Macro-Economic Stability: Switzerland's *Wirtschaftsring*

James Stodder[1], stoddj@rpi.edu, 860-548-7860
Rensselaer Polytechnic Institute at Hartford, Hartford CT, 06120, USA (August 27, 2007)

Abstract: The experience of the Swiss Wirtschaftsring ("Economic Circle"), founded in the early 20th century, suggests that the "residual" spending power it provides during recessions is highly counter-cyclical, with important implications for monetary theory and policy.

A money-in-the-production-function (MIPF) specification implies that the quantity of WIR-barter credits should grow with GDP in the long-run, as do ordinary Swiss Franks. Unlike transactions in Swiss Franks, however, the transactions in WIR are *negatively* correlated with GDP in the short-run. Individuals are cash-short in a recession, and economize by greater use of WIR-credits. This counter-cyclical pattern is confirmed in the empirical estimates. *JEL Codes*: E51, G21, P13.

> "…central banks in their present form would no longer exist; nor would money….The successors to Bill Gates could put the successors to Alan Greenspan out of business." - Mervyn King (1999)

I. Introduction

Large scale moneyless clearing, as portrayed by the Walrasian auctioneer, actually flourished in the "storehouse" economies of the ancient Middle East and Americas (Polanyi 1947) – when all the relevant information could be *centralized*. *Decentralized monetary* systems evolved as the information for a complex economy became too great to be centrally managed with ancient information technology (Stodder 1995).[2] Modern IT is again making *centralized barter* plausible, however, on sites like www.barter.net, www.swap.com, and www.itex.com (Anders 2000).

A few prominent macro-economists have speculated that computer-networked barter might eventually replace decentralized money – as well as central banking (King, 1999; Beattie, 1999). Benjamin Friedman's (1999) view that central banking may be challenged was a topic at a World Bank conference on the "Future of Monetary Policy and Banking" (*World Bank* 2000). The purpose of this paper is not to gauge the likelihood of such a regime change. Its focus is rather the macroeconomic character of centralized barter, and, more precisely, its counter-cyclical nature.

---

[1] I would like to thank Marusa Freire, Michael Linton, Daniel Flury, Tobias Studer, and Gerhardt Rösl for their help and encouragement; all remaining errors are my responsibility.

[2] The word "monetary" may derive from the Latin *Moneta*, surname of the mother goddess Juno, in whose temple Roman coins were cast (Onions, 1966). Her epithet *Moneta* is from *monere*, "to remind, admonish, warn, advise, instruct." In addition to being maternal functions, these are consistent with what economic anthropologists have seen as the information purpose of the most primitive monies: primarily a debt record, rather than a means of exchange (Davies, 1984, pp 23-27).

This paper's subject, the Swiss *Wirtschaftsring*, or "WIR", is sometimes grouped under the topic of alternative or dual *currencies*. It is really a centralized credit system for barter, however, and there is no physical currency. Unlike most of the literature on dual currencies, the present paper is not based on a microeconomic search model of a *decentralized* currency, such as the work of Kiyotaki and Wright (1998, 1993). Their model has been applied to the conditions under which a national currency is replaced, in whole or in part, by a foreign currency – as in several Latin American and East European economies (Calvo and Végh, 1992; Trejos and Wright, 1995; Curtis and Waller, 2000; Feige, 2003). This dual-currency literature is well surveyed by Craig and Waller (2000).

These Kiyotaki-Wright (KW) models are not appropriate for our study of the Swiss WIR, however, for at least two reasons. First, KW models the costs of matching holders of goods with holders of a *decentralized* and freely circulating currency. Such search costs approach zero for members of an informationally *centralized* barter network. Second, the KW literature models dual-currency *equilibrium*, and does not usually consider the impact of introducing a secondary currency when there are *persistent shortages of the dominant currency*.

The one exception to this equilibrium focus is the work of Colacelli and Blackburn (2006). Although using a KW model, it does consider such shortages. It analyses surveys of Argentine users of *creditos,* a generic term for localized currencies, during that country's recession of 2002-2003. These surveys show *credito* usage especially common among less skilled employees and women, who may be more economically vulnerable. Importantly for the counter-cyclical thesis of the present paper, Colacelli and Blackburn present evidence that:

a) The circulation of *creditos* was strongly correlated with *shortages* of the national currency, as was the growth of local 'script' currencies in the US depression of the 1930s (Fisher, 1934);
b) Real income gains to *credito* users were substantial, averaging 15% of Argentina's mean personal income.

This is still a decentralized *currency*, however. Tobias Studer's (1988 [2006]) study of the Swiss WIR is the only economic analysis (in English) we know on a current large-scale centralized barter system.

II. Statement of the Argument

For a simple model of informationally centralized barter, consider firms, A, B, and C, each of which lacks one good -- a, b, and c, respectively. Let us say that A currently holds c, B holds a, and C holds b. This failure of the "Double Coincidence of Wants" (Starr, 1988) is shown in Figure 1 below.

Figure 1: The Failure of Double-Coincidence

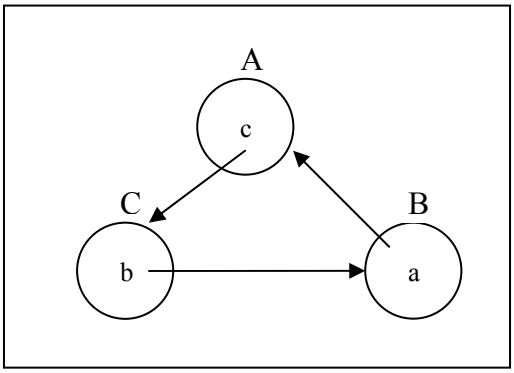

If competitive equilibrium prices are normalized at unity, Pa = Pb = Pc = 1, then the direction of mutually improving trade is shown by the arrows in the picture: A gives a unit of c to C, C gives a unit of b to B and, and B a unit of a to A. But if these are the only goods of interest for each firm, then there are no *bilaterally* improving barter trades. The three formal conditions for the failure of bilaterally improving barter (Eckalbar, 1984; Starr, 1988) are that there is (i) no *single good* held in sufficient quantity by *all agents* to be used as a "money", (ii) no *single agent* holding sufficient quantity of *all goods* to serve as a central "storehouse", and (iii) *cyclical preferences* for at least three agents over at least three goods; e.g., firm A prefers $a \succ b \succ c$, B prefers $b \succ c \succ a$, and C prefers $c \succ a \succ b$.

The Eckalbar conditions are almost certain to be met in any economy with a modest diversity of endowments, preferences, and specialization – unless there are institutional arrangements to ensure the existence of (i) a money, or (ii) a storehouse (Stodder, 1995). Lacking such, non-bilateral trade can take place in very simple economies, but some form of *centralized credit accounting* is still necessary. In reasonably complex economies, however, the historic and anthropological literature shows a virtual coincidence of decentralized monetary exchange and market exchange (Davies, 1994; Stodder, 1995).

Modern information technology, however, may be changing this coincidence. The WIR-bank or *Wirtschaftsring* ("Economic Ring") in Switzerland is the world's largest barter exchange (Studer, 1998). It keeps centralized accounts for each household or firm, in terms of its credits, also called "WIR". From the individual's point of view, this functions very much like an ordinary bank account, with credit inflows and debit outflows, and "overdraft" allowances determined by one's credit history. The exchange problem is solved with a virtual money.

It is the macroeconomic performance of such a money, however, which is of chief interest here. Such a centralized barter exchange combines the functions of both a commercial bank, and for its currency at least, a central bank. It will thus have more detailed knowledge of credit conditions than either a commercial or a central bank alone. Of course it can still make mistakes, extending too much in overdrafts or in direct loans. Such credit "inflation" has occurred in the WIR (Defila 1994, Stutz 1994, Studer 1998). As we will see, however, the clearing credit, or "Turnover" advanced by the WIR is highly flexible, and automatically balanced by the transactions themselves. Under such centralized credit conditions, Say's Law is confirmed, even in Keyne's over-simplified version (Clower and Howitt, 1998) of supply creating its own demand.

The WIR was inspired by the ideas of an early 20th-century economist, Silvio Gesell (Defila 1994, Studer 1998), to whom Keynes devoted a chapter of his General Theory (1936; Chapter 23). Despite criticisms, Keynes saw this "unduly neglected prophet" as anticipating some of his own ideas.[3]

This link between Keynesian and Gesellian *theory* might have made Gesellian *institutions,* like the WIR-Bank, of more interest to contemporary economists.[4] Only one, however, seems to have

---

[3] Keynes noted (1936, p. 355) that "Professor Irving Fisher, alone amongst academic economists, has recognised [this] significance," and makes a prediction that "the future will learn more from the spirit of Gesell than from that of Marx."

[4] Gerhard Rösl of the German Bundesbank (2006) does looks at Gesellian currencies – with zero interest rates and explicit holding costs. These holding costs were called *demurrage* by Gesell, a term he seems to have borowwed from his experience in commercial shipping. Rösl uses the German term *Schwundgeld*, or 'melting currency'. Demurrage currencies have grown in popularity in low inflation environments like the current Euro area (as Rösl documents), but especially in deflationary environments like Argentina or the US in the 1930s, as previously mentioned. Rösl's criticisms of demurrage do not apply to the Swiss WIR, however, since (a) the WIR stopped charging demurrage in 1948, and (b) charges interest on large overdrafts and commercial loans (based on one's credit history), (Studer 2006, pp. 16, 31). Interestingly, Rösl uses a "money in the production function" (MIPF) model, as in the current paper.

studied the macroeconomic record of WIR. Studer (1998) finds a positive long-term correlation between WIR credits and the Swiss money supply – a correlation we also find in the long-run. But Studer's data (1998) stops in 1994, and he does not test for cointegration. The present study uses Error Correction Models (ECMs) to show that WIR activity is strongly counter-cyclical.

III. Functional Specifications – Money in the Production Function

III.1 Theoretical Basics

A convenient way of estimating macroeconomic role of money is the "money in the production function" (MIPF) specification, analogous the "money in the utility function" (MIUF). Either MIPF and MIUF can be justified by the transactions-cost-saving role that money plays, to move an economy closer to its efficiency frontier. (Patinkin; 1956, Sidrauski, 1967; Fischer, 1974, 1979; Short, 1979; Finnerty, 1980; Feenstra, 1986; Hasan and Mahmud, 1993; Handa, 2000, Rösl, 2006). We will not develop the search-theoretic model required to thoroughly ground such a formalization, but the literature is large and the intuition straightforward.

Finnerty (1980) shows the general conditions under which a MIPF specification can be derived from the solution to the firm's cost minimizing problem. With some minor changes in his notation, we can write the cost minimization problem as:

$$\text{Min: } c \cdot K + r \cdot m(\overline{Q}, K)$$

$$\text{s.t.: } \overline{Q} \leq g(K), \qquad (1)$$

where K is a vector of productive inputs needed to produce $\overline{Q}$, the later being defined exogenously; c is a vector of these input costs, and r is the opportunity cost of holding real money balances. The function m( ) determines these balances. Thus m( ) is a transactions cost relationship – the minimum cash balances required to coordinate the physical transformation of inputs K into output $\overline{Q}$. Finnerty (1980, p. 667) calls this function the stochastic "time pattern of cash outflows for the purchase of inputs and cash inflows from the sale of output can be used to determine *the minimum level of real cash balances*,

$m > 0$, that will facilitate all such transactions" *(emphasis added).* As he notes, the necessity for money can be seen as equivalent to the existence of uncertainty.[5]

The existence of a "residual" currency m_1, which will complement the functioning of the original currency m_0, gives us a natural extenstion of this notation. Consider the costs of transacting and purchasing goods with ordinary money, m_0, and reisidual currency, m_1:

$$c_0K_0 + c_1K_1 + r_0m_0(\overline{Q}_0, K_0) + r_1m_1(\overline{Q}_1, K_1)$$

If m_0 and m_1 are freely exchanged, so m_1 is convertible to m_0 by the formula $m_0 = (c_0/c_1)m_1$. Thus the above can be rewritten in terms of m_0 alone, the values c_1K_1 and $m_1(\overline{Q}_1, K_1)$ both having been multiplied by (c_0/c_1) to yield c_0K_1 and $m_0(\overline{Q}_1, K_1)$, respectively, for the minimization:

$$\text{Min: } c_0K_0 + c_0K_1 + r_0m_0(\overline{Q}_0, K_0) + r_1m_0(\overline{Q}_1, K_1)$$

$$\text{s.t.: } \overline{Q} = \overline{Q}_0 + \overline{Q}_1 \leq g(K_0, K_1) = g_0(K_0, \overline{K}_1) + g_1(\overline{K}_0, K_1),$$

$$\text{where } r_0 > r_1 \text{ and } c_0 \leq c_1 \qquad (1a)$$

The notation and assumptions are now explained. The first inequality, $r_0 > r_1$, shows the relative opportunity cost of holding each kind of money. Recall that m_0 is far more useful than m_1 – the former is universally fungible, while the latter is only accepted within a reciprocal exchange community such as WIR. Thus, there must be a higher opportunity cost of holding balances of m_0. This is consistent with the observation that most supplementary currencies like WIR charge no interest on short-term overdrafts (Studer, 1981, pp. 15-16), and charge less than normal money interest rates on longer-term loans (Studer, p. 31).

The second inequality, $c_0 \leq c_1$, stems from the first. It is commonly observed in the monthly WIR magazine (WIR-Plus, various issues) that the prices of goods and services are quoted in both WIR

[5] Finnerty further notes that the precise details of this real balance minimization problem may be left unspecified, just as they are in the economist's use of a generalized production function. As in the generalized production function, however, some of the necessary *mathematical* properties of the function m( ), can and will be developed.

and SFr. Prices in WIR are usually for a *higher* number of units than those in SFr, typically about 20 percent higher. This is reasonable, given the lower fungibility of WIR.

Although the currencies are freely exchangable, we will assume that for this firm, K_0 is purchased just with ordinary money, m_0, at cost of c_0, while K_1 is purchased with just residual credits, m_1, at cost c_1. In our specification $g(K_0, K_1)$, the inputs K_0, K_1 are physically indistinguishable in *production*, just as a unit of $\overline{Q}_0$ is indistinguishable from a unit of $\overline{Q}_1$. For purposes of accounting, however, we will keep track of units of Q_0 as being produced exclusively by K_0 and Q_1 exclusively by K_1 – because these inputs will typically be purchased and used at different times.

The notation $g(K_0, K_1) = g_0(K_0, \overline{K}_1) + g_1(\overline{K}_0, K_1)$, with the bar indicating exogeneity, is meant to convey that K_0 and K_1 can be evaluated separately along the way, their marginal contribution depending on the timing of their use. So, for example, if K_1 is purchased and used *after* K_0, we would have, *at different times,* $\partial g/\partial K_0 > \partial g/\partial K_1$, since g( ) is concave. In this sequence, $\partial g/\partial K_0$ would be evaluated *first* (at $K = K_0 + \overline{K}_1$ where $\overline{K}_1 = 0$) and then $\partial g/\partial K_1$ would be evaluated *second* (at $K = \overline{K}_0 + K_1$, when $\overline{K}_0$ has already been added, and K_1 is at its peak). Of course the sequence of inputs could also have been the opposite, K_1 being added first. In equilibrium, the marginal productivities of K_0 and K_1 must be identical – since they are physically indistinguishable. (A corollary in our formal results will confirm this.)

From the function $m(\overline{Q}, K)$ in (1), one can derive the implicit function $Q = h(K, m)$. This can be considered a *monetary transaction function*, analogous to the indirect utility function. The optimization of (1a) makes explicit a cost-minimizing tradeoff between inputs, so that minimizing the expenditures of c_0K_0 and c_1K_1 will in general *not* imply the minimal real balance opportunity costs of r_0m_0 and $r_1(c_0/c_1)m_1$, nor the cost-minimizing solution overall. Finnerty goes on to show how a *convex combination* of this *monetary transaction function,* in our terms, $Q = h(K_0, K_1, m_0, m_1)$, and the *physical*

input function $Q = g(K_0, K_1)$ – both of which are assumed convex and monotonically increasing – give us a convex and monotonic "Money in the Production Function" (MIPF) of the form:

$$Q = f(K_0, K_1, m_0, m_1).^{6} \qquad (2)$$

Using (2) and implicit differentiation, it is easy to verify that the solution to the problem

Min: $c_0K_0 + c_0K_1 + r_0m_0 + r_1(c_0/c_1)m_1$, where as before, $r_0 > r_1$ and $c_0 \leq c_1$,

s.t.: $\overline{Q} = \overline{Q}_0 + \overline{Q}_1 \leq f(K_0, m_0, K_1, m_1) = f_0[(K_0, \overline{K}_1), m_0] + f_1[(\overline{K}_0, K_1), m_1]$, (2a)

is identical to that of problem (1), since first order conditions are the same. This yields the following:

<u>Lemma 1</u>: *For a cost minimizing firm, the marginal productivity of m_1 is lower than that for m_0.*

<u>Proof</u>: From the first order conditions of (2a), $(r_1/r_0)(c_0/c_1) = (\partial f/\partial m_1)/(\partial f/\partial m_0) < 1$ since both (r_1/r_0) and (c_0/c_1) are less than 1.

<u>Lemma 2</u>: *If a firm produces $Q_0 \neq \overline{Q}_0$, cost minimizing transactions in m_1 and K_1 will adjust total output to the optimum $\overline{Q} = Q_0 + Q_1 = \overline{Q}_0 + \overline{Q}_1$, so long as final real balances in m_1 maintain their original optimum level, $m_1 = m_1$*.*

<u>Proof</u>: First order conditions of (2a) yield Marginal Rates of Substitution (MRS) for m_0, K_0 and m_1, K_1: $(\partial f/\partial K_0)/(\partial f/\partial m_0) = (c_0/r_0) < (c_1/r_1) = (\partial f/\partial K_1)/(\partial f/\partial m_1)$; with the inequality shown by $(c_0/c_1) \leq 1 < (r_0/r_1)$. If $Q_0 \neq \overline{Q}_0$, then $K_0 \neq K_0$*. But if $m_1 = m_1$*, then an optimal MRS for m_1 and K_1, implies that $(\partial f/\partial K_1)$ be evaluated at the optimum level $K_0 + K_1 = K$*, and the result follows.

<u>Corollary</u>: *The marginal productivity of capital is the same in equilibrium, regardless of its financial origin; i.e., $\partial f/\partial K_0 = \partial f/\partial K_1$.*

<u>Proof</u>: Using a result of Lemma 1, $(r_1/c_1)/(r_0/c_0) = (\partial f/\partial m_1)/(\partial f/\partial m_0)$, we substitute out the marginal products of m_0 and m_1 from the MRS ratios of Lemma 2. The result follows.

---

[6] Finnerty shows that a sufficient condition for the montonicity of f( ) is that $\partial m/\partial K < 0$. In this sense, K inputs and real money balances are *transactional substitutes* – that by purchasing larger quantities of inputs K at any one time, a firm can economize on its real money balances. This, implicitly, is the tradeoff between input inventory and real balance costs.

Lemma 2 shows the counter-cyclical potential of m_1. If the quantities of output the firm can sell in the ordinary money economy are exogenously limited, so that $Q_0 < \overline{Q}_0$ (or equivalently, if credit markets limit the firm's access to $m_0 < m_0^*$), it can nonetheless achieve full $\overline{Q}$ by using $m_1 = m_1^*$. The result is symmetric: if we have $Q_0 > \overline{Q}_0$ and $m_0 > m_0^*$, then $m_1 = m_1^*$ will provide a reduced impetus. In either case, $m_0 \neq m_0^*$, but $m_1 = m_1^*$ implies that $K_0 - K_0^* = K_1 - K_1^*$ -- so that $\overline{Q}$ itself is fixed. Perhaps, rather than calling m_1 a "complementary" currency (the most common current term), we should call it a *residual* currency, always ready to 'take up the slack'.

But why m_1 should have this remarkable power of self-adjustment? After all, there are secondary currencies in many parts of the world – such as the US dollar in much of Latin America, or the Euro in Eastern Europe – their supplies determined by a foreign central bank. Money creation in credit/debit system like WIR, on the other hand, is completely endogenous. As Studer (1998, pp. 3031) puts it:

> opening a WIR account the new member can immediately establish a positive clearing balance by selling something for WIR, thereby gaining a means of payment for trading within the WIR barter circle. This process, it should be noted, only allows the new member to receive WIR credits from another member.

Note this credit clearing 'money' of the WIR system is automatically self-balancing; the WIR-Bank:

> can freely create money-like clearing balances and put them into circulation. …all "circulating" WIR money in fact never leaves the Central Office, but rather stays on its books in its role as creditor. Thus upon the granting of a WIR loan, an asset and an equal liability are created simultaneously. Loan recipients, at the moment the loan is activated, take on WIR assets and liabilities of equal amount. Thus WIR members always show either a positive or a negative WIR balance…

These negative balances are a loan from the WIR Bank. Short-term overdrafts are interest-free, with limits "individually established" (Studer, p. 31). As long as the average value of these limits is maintained, the WIR-Bank can be quite relaxed about variations in its *Turnover*, or total money in circulation. The system is highly flexible: while the *average individual net* debit position is set by overdraft limits, the (absolute value of) *total circulation* of credits and debits (Turnover) is determined

only by economic need. The *net* of this total, meanwhile, is identically zero due to "the automatic plus-minus balance of the system as a whole" (Studer, p. 31) – a practical confirmation of Say's Law, also an identity (Clower and Howitt, 1998). It is this balanced credit flexibility – neither inflationary nor deflationary, as long as overdraft limits are maintained – that forms the promise of what Studer (p. 31) calls "practically unlimited potential" for expansion under a centralized barter system.[7]

III.2 Empirical Specifications

The counter-cyclical element of our residual currency is not its m_1 balances, which Lemma 2 shows to be quite stable. It is rather m_1 *Turnover,* or total WIR-money in circulation – essentially the *WIR-net-credit balances times their velocity*. From (1a) and (2a), define Turnover as $\tilde{m}_1 = c_1K_1 = c_1(K^* - K_0)$, with a dominant currency value of $(c_0/c_1)\tilde{m}_1 = (c_0/c_1)c_1K_1 = c_0K_1$. Since the WIR-Bank keeps track of this Turnover, we can estimate its correlation with GDP and Unemployment.

If $\tilde{m}_1 = c_1K_1 = c_1(K^* - K_0)$, there is a clear counter-cyclical implication. That is, if full potential output $\overline{Q} = g(K_0, K_1)$ is not reached, then both $\tilde{m}_1$ (Turnover) and $\tilde{m}_1/m_1$ (Velocity) should be:

- inversely correlated with variation in output Q (below, GDP),
- inversely correlated with variation in broad money supply m_0 (below, M2), and
- directly correlated with variation in the number of unemployed (below, UE)

– all in the short-term. In the longer term, if WIR's share of the financial system (m_1/m_0) is fairly stable, then m_0, m_1, and Turnover $\tilde{m}_1$ should all grow along with Swiss GDP. This distinction between short term and long term variation suggests an Error-Correction Model (ECM) specification.

As will be seen, there is strong evidence for Granger causality of the broad Swiss money supply measure M2 upon GDP and upon WIR-Turnover – but not *vice-versa*. This makes sense in terms of our model, since variations in Turnover $\tilde{m}_1$ are driven by variations in m_0 –not *vice-versa*. It is also probably due to the small amounts of WIR in the Swiss national economy. Swiss M2 measured 475.1

[7] The remarkable flexibility of an "automatic plus-minus balance" system is also shown in a pedagogical experiment designed by LETS founder Michael Linton (2007), available at www.openmoney.org/letsplay/index.html.

Billion Swiss Francs (SFr) in 2003,[8] whereas annual Turnover in WIR is seen in Table 1 to have been 1.65 Billion SFr that same year. Thus the ratio of WIR Turnover to M2 is only one third of one percent.

In our MIPF formalization (2a), what signs do we expect on the derivatives of m_0 and m_1? Due to the limitation on exchange to the *Wirtschaftsring*; i.e., among members of the reciprocal exchange community, m_1 will of course be less fungible. Lemma 1 shows that m_1 will also be less *transactionally productive* than m_0 in realizing Q *in the long run*. That is, in the ECM portions of our specifications, for the effect of the terms m_0, m_1, and $\tilde{m}_1$ (i.e., M2 money supply, WIR Credit balances, and WIR Turnover, respectively) upon GDP:

$$\frac{\partial f}{\partial m_0} > \frac{\partial f}{\partial m_1} > \frac{\partial f}{\partial \tilde{m}_1} > 0 \tag{3}$$

In many MIPF estimates (not shown here), there is clear evidence for the positive signs in (3). Evidence for their relative ordering, however, is mixed.

By the substitutability of m_0 and m_1 shown in Lemma 2, these terms should be negatively correlated in the short-term or cyclical sense: $\tilde{m}_o - \tilde{m}_0^* = \tilde{m}_1 - \tilde{m}_1^*$. Numerous estimates (also not shown) show that m_0 and m_1 are *pro-cyclical*. This is not at all surprising: the pro-cyclical character of the normal money supply is well known (Mankiw, 1993; Mankiw and Summers, 1993; Bernanke and Gertler, 1995; Gavin and Kydland, 1999). We will concentrate our presentation on the estimates that show $\tilde{m}_1$ ("Turnover") is *counter-cyclical*.

From our result on Turnover we have $\tilde{m}_1 = c_1K_1 = c_1(K^* - K_0)$, so that $\partial \tilde{m}_1 / \partial K_0 = -c_1 < 0$. Since K_0 in our model varies directly with m_0 and Q_0 (the overwhelming bulk of output), and indirectly with unemployment in the short term, we expect to find some short term partial derivatives of the form:

$$\partial \tilde{m}_1 / \partial Q < 0, \tag{4.1}$$

$$\partial \tilde{m}_1 / \partial m_0 < 0, \text{ and} \tag{4.2}$$

[8] Swiss National Bank (SNB) *Monthly Statistical Bulletin* (August 2005), Table B2, Monetary aggregates: www.snb.ch/e/publikationen/publi.html?file=/e/publikationen/monatsheft/aktuelle_publikation/html/e/inhaltsverzeichnis.html

$$\partial \tilde{m}_1 / \partial \mathrm{UE} > 0, \tag{4.3}$$

where UE is the number (not the rate) of Unemployed persons.

As noted, $\tilde{m}_1$, Q, m_0, and UE should all grow together in an expanding economy. But we are not so concerned about the functional forms of this long term relationship – i.e., the error-correction portion of an Error Correction Model (ECM). As long as this relationship is cointegrated, we concentrate on the coefficients of the *lagged, first-differenced values* of these RHS terms (i.e., in the VAR portion of the ECM), which are clearly exogenous. (4.1) - (4.3) would thus be derived from:

$$D\tilde{m}_1 = \alpha_1[\tilde{m}_1 - \alpha_{11}Q] + \sum_{i=1}^{N}\{\beta_1 D\tilde{m}_1(-i) + \gamma_1 DQ(-i)\}, \tag{4.1a}$$

$$D\tilde{m}_1 = \alpha_2[\tilde{m}_1 - \alpha_{21}m_0] + \sum_{i=1}^{N}\{\beta_2 D\tilde{m}_1(-i) + \gamma_2 Dm_0(-i)\}, \tag{4.2a}$$

$$D\tilde{m}_1 = \alpha_3[\tilde{m}_1 - \alpha_{31}\mathrm{UE}] + \sum_{i=1}^{N}\{\beta_3 D\tilde{m}_1(-i) + \gamma_3 \mathrm{DUE}(-i)\}, \tag{4.3a}$$

where $D\tilde{m}_1(-i)$ is the first-difference term from i periods ago, summed over N periods, etc.

Applying this reasoning to the ECM equations (4.1a) - (4.3a), we expect the coefficients on Q, m_0, and UE to be positive in the <u>error-correction portion</u> [in square brackets].[9] But in the <u>VAR portion</u> {in curly brackets}, we expect both γ_1 and γ_2 to be negative, and γ_3 to be positive, if $\tilde{m}_1$ is indeed counter-cyclical. That is, in the long-term <u>error-correction term</u> of the ECMs above, we expect:

$$\alpha_{11} = \partial D(\tilde{m}_1)/\partial Q < 0,\ \alpha_{21} = \partial D(\tilde{m}_1)/\partial m_0 < 0,\ \alpha_{31} = \partial D(\tilde{m}_1)/\partial \mathrm{UE} > 0. \tag{4.4}$$

Looking at just the short-term, in the <u>VAR portion</u> of the ECM, (4.1)-(4.3) would be expressed by:

$$\gamma_1 = \partial D(\tilde{m}_1)/\partial D(Q(-1)),\ \gamma_2 = \partial D(\tilde{m}_1)/\partial D(m_0(-1)) < 0 < \gamma_3 = \partial D(\tilde{m}_1)/\partial D(\mathrm{UE}(-1)). \tag{4.5}$$

As will be shown, these counter-cyclical effects are present throughout the period of our study, but strongest in the earlier period (1948-1972) when WIR and SFr were closer substitutes. This counter-cyclical activity of WIR can be interpreted as extending the transactional productivity of ordinary money, especially when the latter is limited by anti-inflationary policy. This immediately raises the

question of whether such alternative-money activity is itself inflationary – a question to which I will return in this paper's conclusion.

IV. Empirical Results

IV.1. Data and Initial estimates

Because the WIR record is not widely available, I provide the basic data. The WIR bank has provided 56 years of data on *Nombre de Comptes-Participants* ("Number of Account-Participants"), *Chiffre (o Volume) d'Affaires* ("Turnover" activity), and *Autres Obligations Financières envers Clients en WIR* (or "Credit" advanced in the form of credit to one's reciprocal exchange account). Turnover and Credit are equivalent to $\tilde{m}_1$ and m_1 in our model, respectively, and are given in terms of WIR; i.e., their Swiss Franc (SFr) equivalents. Other macro-economic time series used in this paper are from Madison (1995), Mitchell (1998), OECD (2000), the IMF (2004) and World Bank (2004).

(Please Insert Table 1 about here.)

These data raise a number of questions. Consider Figure 2 below, which plots WIR Turnover relative to the number of Unemployed in Switzerland:

1) What explains the turning points in WIR Turnover in the early 1970s, '80s, and -90s?
2) WIR Turnover tracks the number of Unemployed fairly closely. Is this evidence of a counter-cyclical trend?

As will be seen in what follows, this paper may help explain a change in WIR trend in the early 1970s, but not the later turning points. And we do find some evidence for a counter-cyclical trend.

(Please Insert Figure 2 about here.)

Estimates of the Swiss GDP production function (not shown here) were consistent with our basic MIPF equation (2), when specified with inputs of Capital, Labor, and Money (M2). Furthermore, all coefficients had the expected positive signs in most specifications of the underlying error-correction equation, Q = f(L, K, m), and also in the VAR portion of the ECM.

---

[9] Note that while α_{11}, α_{21}, $\alpha_{31} > 0$, there is a negative sign placed before them in (4.1a - 4.3a).

IV.2. Effect of GDP upon WIR Turnover

Our estimates of equation (4.1a) in Table 2 below show that lagged GDP has the expected positive sign in the error correction component of each regression, with cointegration significant in 2(A), but not 2(B).[10] The latter is also problematic because there is evidence of serial correlation. Granger/ Exogeneity tests are at or near 5 percent significance in both columns. In the VAR portions of the regressions, coefficients on the first lag of differenced GDP, and also the lag of the first-differenced 2-year growth term have the expected negative (counter-cyclical) sign. Coefficients on first lagged difference term in 2(A) are comparable in absolute value to the coefficients on the second lag – so that the net effect appears minimal. Since we are concerned with short-term stabilization, however, this is not problematic.

(Please insert Table 2 and Table 3 about here.)

Table 3 shows evidence of a structural break in the relationship between GDP and WIR Turnover. Rejoining the time series of columns 3(A) and 3(C) for a single regression, we find P-values of 2.55e-06 and 1.17e-03 for the Chi-Squared statistic of the Chow Breakpoint and Forecast tests, respectively. Similarly joining up 3(B) and 3(D), we find Breakpoint and Forecast P-values of 2.98e-06 and 1.29e-03, respectively. What could cause such a structural break around 1973?

According to official histories, Defila (1994) and Studer (1998), 1973 was a turning point for the WIR-Bank. A conflict arose over the widespread "discounting" of WIR – unused credits sold directly for SFr, usually at substantial discount. WIR introduced measures to detect and prohibit such trading in the fall of 1973. Of course WIR will usually be worth less than SFr in direct trade, since it cannot be used as widely. Studer reports (1988, p. 21) that a counter-cyclical monetary argument was raised to defend this discount trade: "that it created additional turnover and facilitated members' ability to ride out periodic currency-liquidity bottlenecks." Table 3 shows that these arguments may have had a point.

---

[10] Recall that the coefficients in the estimated error-correction form are *negatives* of those in the underlying equation.

There are other events, besides the ban on "discounting," which could have caused a structural break in this series, and which might also be expressed by changes in the cost of carrying out transactions in m_0 and m_1. From Figure 4 below, some of the turning points in the volume in WIR turnover, in the early 1970s, '80s, and '90s, appear to coincide with contrary changes in the value of the Swiss Frank. Our initial regressions did not support this conjecture, but it remains plausible.[11, 12]

Note that in the underlying cointegrating equations of Table 3, WIR is positively correlated with GDP, both pre-1973 and post-1973, as in inequality (4.4). But the significance and size of the coefficients on the error-correction term are much greater pre-1973: greater in 3(A) than 3(C), and in 3(B) than 3(D).

In the pre-1973 estimates of columns 3(A) and (B), the VAR coefficients on the first two lags of differenced GDP are both negative and counter-cyclical, as in (4.5) – and significant except for the first lag in 4(A). In the post-1973 columns 3(C) and (D), by contrast, only the first lagged terms are negative. Importantly, the *sum* of the first two periods' lags is both greater and more significant pre-1973. Thus, compare column 3(A): (sum = -2.08, p-value = 0.024) versus 3(C): (sum = -1.69, p-value = 0.111), and column 3(B): (sum = -4.67, p-value = 0.018) versus 3(D): (sum = -1.59, p-value = 0.209).[13]

The Granger/exogeneity tests in Table 3 are also highly significant, most at the 1 percent level. GDP clearly Granger-causes WIR in both periods, but this causation can be shown to also be *reciprocal* in the later period. Granger causality is even more significant in the 'reverse' WIR-to-GDP direction, with P-values of 2.84e-05 in 3(C) and 1.17e-05 in 3(D). This movement from one-way to two-way

---

[11] The negative correlation between Swiss Franc's foreign exchange rate and WIR Turnover is quite strong for the periods 1970-75, 1980-85, and 1993-96 – around three significant turning points for the WIR series (IMF, 2007). Even the identification of a structural break in 1973, however, does not tell us what *caused* that break. There were many big changes in the world economy around that time: collapse of the Bretton Woods agreements, devaluation of the US dollar, the formation of OPEC, high levels of inflation, negative real interest rates, growth of the Eurodollar market, and the increasing 'disintermediation' of traditional financial institutions. All of these may plausibly be modeled as a higher r_0, the opportunity cost for holding Swiss Franks – and thus a reduced counter-cyclical role for m_1.

[12] 1973 is not even the only structural break that may be identified over this period. It can be shown that 1976 is also a significant break for the data underlying Table 4, under both Chow tests.

[13] Standard error terms for these summation terms are calculated from the covariance matrix of the lagged terms.

causality flows is further evidence of a structural change. To repeat, however, WIR has never been large enough to be an important determinant of Swiss GDP.

IV.3. The Effect of Unemployment Upon WIR Turnover

As Figure 2 above has already shown, growth in the number of Swiss Unemployed workers tracks the number of WIR Participants very closely, with the former about ten times as large in percentage change as the latter. This importance of Unemployment to WIR's trend probably reflects its exclusion of "large" businesses, another important change in the bank's rules since 1973 (Defila 1994). Employees in smaller, less diversified firms have less human capital accumulated, and are much more subject to unemployment risk in many countries, including Switzerland (Winter-Ebmer and Zweimüller 1999, Winter-Ebmer 2001). Smaller firms also typically have more restricted access to formal credit institutions (Terra, 2003), and their owners must rely proportionately more on self-financing, which also increases their risk exposure (Small Business Administration, 1998).

From ECM estimations on these data, it can be shown that the long-term ("secular") cointegrated relationship between WIR Accounts and the Number of Unemployed Workers is positive, as in inequality (4.4). The short-term ("cyclical") effect of Unemployment upon WIR Turnover – lagged differences in the VAR portion – is highly counter-cyclical over the period 1949-2003, as seen in Table 4. Note that correlation between lagged changes in Unemployment and Turnover is positive and counter-cyclical, consistent with inequality (4.5).

(Please insert Table 4 and Table 5 about here.)

Similarly to the previous regressions on GDP, the relationship of Turnover to Unemployment can be shown to undergo a structural break around 1973, and become less counter-cyclical thereafter. This is true, even though the counter-cyclical relationship is relatively strong over the entire period 1945-2003.

If we run a single regression over the entire 1954-2003 period split by the regressions in columns 5(A) and (C), the Chow Breakpoint and the Chow Forecast Chi-squared tests give contradictory results

on the null hypothesis of no structural break: the Chow Breakpoint fails to reject this null, with a rather high P-value of 0.144; the Chow Forecast test rejects it decisively with a P-value of 1.26e-03. [14] However, if we regress over the entire period split by regressions 5(B) and (D), including their time trend, the Chow Breakpoint test has a P-value of 6.73e-03, and similarly, the Chow Forecast test a P-value of 9.06e-09.

Counter-cyclical effects are far stronger pre-1973, in columns 5(A) and (B), than post-1973, in columns 5(C) and (D). The coefficients on lagged, first-differenced UE in 5(A) and (B) are also more significant, and for two periods instead of just for one, as in 5(C) and (D). Note the size of coefficients on the error correction terms are also greater pre-1973, by 4 or 5 times, and more significant by several orders of magnitude. This is similar to the period contrast for our regression on GDP, in Table 3.

Also as in Table 3, Granger-causality in Table 4 is reciprocal for the later, but not the earlier period. P-values for the opposite direction – for WIR Granger-causing Unemployment – were 0.1587 and 0.1343 for columns 5(A) and (B), but 0.0408 and 0.0369 on columns 5(C) and (D), respectively. Again, it is unlikely that WIR, of small value within the Swiss national economy, could directly cause significant changes in the number of unemployed persons. But again, this change in the directions of Granger causality does suggest some basic structural shift.

IV.4. The Effect of M2 Upon WIR Turnover

We next come to an obvious question: If WIR became less tradable for Swiss Francs after 1973, what happened to the correlation between WIR and the Swiss money supply? Figure 5 suggests that WIR followed Swiss M2 very closely up to about 1972, but seems to have "decoupled" since then.

(Please insert Figure 5 about here.)

Chow Chi-squared tests give clear confirmation of a structural break in the relation between WIR and SFr. in 1973. For a single regression over the entire period split between regressions 6(A) and (C),

[14] It is not unusual for the two Chow tests to yield qualitatively different results. While the Chow Breakpoint test on this form does not meet standard significance, other evidence of structural change in the Table 5 is strong, and consistent with the Chow Forecast test.

the Breakpoint test shows structural change significant at 1.62e-02, the Forecast test at 1.08e-04. For a single regression uniting the period of 6(B) and (D), and the Chow Breakpoint test shows a structural break is significant at 3.98e-03, the Forecast test at 9.94e-05.

All the error correction components in Table 6 show significant positive correlation between M2 and WIR, as one would expect in a growing economy. It appears that M2 was much more closely tied to WIR before 1973 in the long-term, secular, cointegrated sense. As in our previous Tables 3 and 5, the coefficient on the error correction term is larger and more significant in the earlier pre-1973 period. Here, comparing columns 6(B) and (D), the coefficient on M2 in the error correction component of 6(B) is an order of magnitude greater than in 6(D). Interpreted as long-run elasticities, a permanent one percent rise in M2 before 1973 would increase WIR-Turnover by over 70 percent in the long-term. Post-1973, by contrast, the long-term change in WIR-Turnover would be less than 7 percent. We note that the trended specification of ECM in columns 6(B) and (D) is more reliable, since the specification in 6(A) and (C) fails to show Granger causality, and also because 6(C) shows no cointegration.[15]

In contrast to the closer long-run relationship in the earlier period, however, the short term elasticities are more negative, more significant, and more persistent post-1973. Examining the short term coefficients in the VAR portion of columns 6(B) and (D), we see that the latter set are higher in absolute value for the first two lags, and more significant for three lags. The "decoupling" of WIR and M2 seen in Figure 5 can thus be seen as a combination of these two effects – a greater positive long-run elasticity pre-1973, and more negative short-run elasticity post-1973. The negativity of the short-run effect makes sense in our model, which shows $\tilde{m}_1$ counter-cyclical to the pro-cyclical m_0, in (4.5). Our model does not explain, however, why these coefficients should appear more negative post-1973.

(Please insert Table 6 about here.)

[15] Note that, as in our previous Tables 3 and 5, Granger causality can also flow in the reverse direction post-1973, column (D) showing a reverse causality significant at the 1 percent level.

V. Conclusions and Discussion

This linkage between WIR and M2 begs the question – which was more effective as a counter-cyclical tool? There is clear evidence of M2's *pro*-cyclical performance (not shown here) for the entire period 1952-2003. This is consistent with our theory, which shows that short term variation in m_0 can be pro-cyclical. And it is reinforced by a considerable literature (Mankiw, 1993; Mankiw and Summers, 1993; Bernanke and Gertler, 1995; Gavin and Kydland, 1999) finding that the broad money supply is highly pro-cyclical. Even less controversial is the finding that the *velocity* of money is pro-cyclical (Tobin 1970, Goldberg and Thurston 1977, Leão 2005). Our key variable, WIR Turnover, is actually WIR-money times Velocity, so the counter-cyclical trend of WIR Turnover (pre-1973) is doubly impressive.[16]

Our estimates suggest that WIR-Bank's creation of purchasing power could become an instrument of macro-economic policy. According to our model, furthermore, this result is not highly scale-dependent. (Recall that by our latest data, in 2003 WIR-Turnover/M2 = 0.35%.) Rather, it is a result of the automatic net-zero balance system like WIR (Studer, p. 31).

There is substantial evidence for the general form of our hypothesis, that centralized reciprocal exchange of WIR is counter-cyclical with GDP, and even more so with the Number of Unemployed. These results may help answer a basic question within macroeconomic theory – whether macro-instability is more due to price rigidity, or to instability in money and credit. Keynes (1936) recognized that both conditions can apply, and that either can lead to instability. Macroeconomists like Colander (1996, 2006) stress monetary and credit conditions. The consensus, however, as represented by Mankiw (1993), puts the blame more on rigid prices. Our model clearly supports the monetary side, focusing on "wrong" levels of M2 – which can be smoothed over by variations in WIR Turnover.

---

[16] Further regressions (not shown here) show that WIR velocity is in fact highly counter-cyclical, while WIR credits are themselves somewhat pro-cyclical. The net effect on Turnover is counter cyclical.

Reflecting the macroeconomic consensus, most commentary on e-commerce has stressed its improved price flexibility.[17] However, telecommunications networks show increasing returns to scale (Romer 1997, Howitt and Phillipe 1998, Arthur 1996), and this may fuel *pro-cyclical* instability. This is the implication of several recent models and simulations (Azariadis and Chakraborty, 1998; Chichilnisky and Gorbachev, 2004; Sterman *et. al.,* 2006). The WIR exchange network is also subject to increasing returns and "network externalities," yet its activity appears counter-cyclical.

What about the inflationary potential of such a network? A preliminary observation is that at current scale, it is unlikely to have any measurable effect. More theoretically interesting points are worth considering, however.

First, since WIR Turnover is counter-cyclical and M2 turnover is pro-cyclical, changes in WIR should be less inflationary than those in M2 itself.

Second, if *net* Credit limits are stable, the automatic net balancing of WIR Turnover, with new credits matched by new debits, allows short-term fluctuations in real output to be matched by velocity. This is potentially consistent with price neutrality. In terms of the quantity equation (for the WIR system itself), Turnover = MV = PY. If M (money) is unchanged, and if any change in V (velocity) is matched by a change in Y (real goods and services), then the change in P (price) must be zero: If $\Delta M = 0$ and $\Delta V = \Delta Y$, then $\Delta P = 0$. This "practically unlimited potential" (Studer, p. 31) for self-balancing credit creation would only be strictly true for a closed WIR-type system, however.

In fact, however, and as our final point, WIR is a counter-cyclical "residual" currency. Our estimates show that it is most likely to be accepted when ordinary (pro-cyclical) money is in short supply. This should focus the transactional effectiveness of WIR – to be greatest precisely where its

---

[17] Magenheim and Murrell (1988) see the persistence of barter as explained by its lack of transparency, providing greater scope for price discrimination. The WIR record does not record support this hypothesis, however since: (a) WIR activities are often advertised and always centrally recorded – and thus inappropriate for "confidential" price discrimination. (b) As previously noted, prices for goods and services advertised in WIRPlus (2000-2005) are often *higher* in WIR than in Swiss Francs, so this is not obviously *downward* price flexibility. (c) WIR's bylaws restrict membership to *small and medium businesses* (Defila 1994), and these will have little price-setting power. Thus, while the Magenheim-Murrell (1988) may hold for other forms of 'countertrade', WIR's counter-cyclical trend is not likely to stem from improved price flexibility.

inflationary potential is the least. WIR money does not 'top up' the supply of Swiss Francs – it *substitutes* for Swiss Francs that are otherwise unavailable. The effect of increased WIR Turnover on prices is not inflationary, then, but *anti-deflationary*.

References

ARTHUR, W. Brian (1996) "Increasing Returns and the New World of Business", ***Harvard Business Review***, Boston: July-August.

AZARIADIS, Costas, and Shankha Chakraborty (1998) "Asset Price Volatility In A Nonconvex General Equilibrium Model," ***Journal of Economic Theory***, **(12)**3, pp. 649-665.

BEATTIE, Alan (1999) "Internet Heralds Coincidence of wants," ***Financial Times***, Dec. 6.

BERNANKE, Ben S. and Gertler, Mark (1995) "Inside the Black Box: The Credit Channel of Monetary Policy Transmission," ***Journal of Economic Perspectives***; Fall 1995, 9(4), p. 27 48.

CHICHILNISKY, Graciela, and Olga Gorbachev (2004) "Volatility in the Knowledge Economy", ***Journal of Economic Theory***, **(24)**3, (Oct.), pp. 531-47.

CLOWER, Robert and Peter HOWITT (1998) "Keynes and the Classics: An End of Century View, in ***Keynes and the Classics Reconsidered***, Ahiakpor, James C. W. (ed.), Boston: Kluwer Academic Press.

CALVO, Guillermo, and Carlos Végh (1992) "Currency Substitution In Developing Countries: An Introduction," IMF Working Paper 92/40 (May 1992).

COLACELLI, Mariana, and David J.H. Blackburn (2006) "Secondary Currency: An Empirical Analysis," Columbia University, www.columbia.edu/~mc2602/files/Colacelli-Currency-Dec-06.pdf.

COLANDER, David (2006), ed., ***Post Walrasian Macroeconomics: Beyond the Dynamic Stochastic General Equilibrium Model***. Cambridge, UK: Cambridge University Press.

_____ (1996), ed., ***Beyond Micro-foundations: Post Walrasian Macroeconomics***. Cambridge, UK: Cambridge University Press.

CRAIG, Ben. R, and Christopher J. Waller (2000) "Dual-Currency Economies as Multiple-Payment Systems," Cleveland Federal Reserve, ***Economic Review***, Quart. 1, **36**(1), pp. 2-13. http://clevelandfed.org/research/review/2000/index.cfm#Q1

CURTIS, Elisabeth S., and Christopher J. Waller (2000) "A Search-Theoretic Model of Legal and Illegal Currency," ***Journal of Monetary Economics***, **45**(1), February, pp. 155–84.

DAVIES, Glyn (1994) A History of Money, Cardiff, UK: University of Wales Press.

DEFILA, Heidi (1994) "Sixty Years of the WIR Economic Circle Cooperative: Origins and Ideology of the Wirtschafts-ring," ***WIR Magazin***, September. (Translation by Thomas Geco.) http://www.ex.ac.uk/~RDavies/arian/wir.html.

Economic Report of the President (1996), Washington, DC: US Government Printing Office.

Economist Magazine (2000a), "Economics Focus: Who Needs Money?" January 22.

_____ (2000b), "Economics Focus: E-Money Revisited," July 22.

ECKALBAR, John,C. (1984) "Money, Barter and Convergence to the Competitive Allocation: Menger's Problem", ***Journal of Economic Theory***, 32, April: 201-11.

FEENSTRA, Robert C., (1986) "Functional Equivalence between Liquidity Costs and the Utility of Money," ***Journal of Monetary Economics***, Vol. 17, pp 271-291.

FINNERTY, John (1980) "Real Money Balances and the Firm's Production Function: A Note," ***Journal of Money, Credit, and Banking***, **12**(4) November, Part 1: 666-71.

FEIGE, Edgar L. (2003) "The Dynamics of Currency Substitution, Asset Substitution and De Facto Dollarization and Euroization in Transition Countries," ***Comparative Economic Studies***, Fall, 2003.

FISCHER, Stanley (1979) "Capital Accumulation on the Transition Path in a Monetary Optimizing Model," ***Econometrica***, **47**(6), November, pp. 1433-40

_____ (1974) "Money and the Production Function," ***Economic Inquiry***, 12, December, pp. 517-33.

FISHER, Irving (1934) ***Mastering the Crisis - With Additional Chapters on Stamp Scrip***, Kimble & Bradford, London.

FRIEDMAN, Benjamin (1999) "The Future of Monetary Policy**",** ***International Finance***, December.

GAVIN, William T. & Finn E. Kydland (1999) "Endogenous Money Supply and the Business Cycle," IB, ***Elsevier for the Society for Economic Dynamics***, **2**(2), April, pp. 347-369.

GREENSPAN, Alan (1999) "Testimony before the Joint Economic Committee," US Congress, June 14.

GOLDBERG, Matthew & Thurston, Thomas B. (1977) "Monetarism, Overshooting, and the Procyclical Movement of Velocity," ***Economic Inquiry***, Oxford University Press, January, **15**(1), pp. 26-32.

GOMEZ, Georgiana M. (2006) "Our market, our community, our money. Complementary Currency Systems in Argentina," Working paper. www.iss.nl/iss/profile/394.

HANDA, Jagdish (2000) ***Monetary Economics***, Routledge.

HASAN, M. Aynul ; Syed F. Mahmud (1993) "Is Money an Omitted Variable in the Production Function? Some Further Results," ***Empirical Economics,*** **18**(3) (1993): 431-45.

INTERNATIOANL MONETARY FUND (IMF), ***International Financial Statistics***, http://imfstatistics.org.

KING, Mervyn (1999) "Challenges for Monetary Policy: New and Old." Paper prepared for the Symposium on "New Challenges for Monetary Policy" sponsored by the Federal Reserve Bank of Kansas City at Jackson Hole, Wyoming, 27 August 1999. www.bankofengland.co.uk/speeches/speech51.pdf .

KEYNES, John Maynard (1936) ***The General Theory of Employment, Interest, and Money***. New York: Harcourt Brace Jovanovich, 1964.

LEÃO, Pedro (2005) "Why does the velocity of money move pro-cyclically?" ***International Review of Applied Economics***, **19**(1) January, pp. 119-135.

LIETAER, Bernard (2004) "Complementary Currencies in Japan Today: History, Originality and Relevance," ***International Journal of Community Currency Research***, Vol. 8, www.le.ac.uk/ulmc/ijccr/vol7-10/8toc.htm.

LINTON, Michael (2007) "LETSplay" simulation of a WIR-type system, www.openmoney.org/letsplay/index.html.

MADISON, Angus (1995***) Monitoring the World Economy, 1820-1992***, Paris: OECD.

MAGENHEIM, E. and P. MURRELL (1988) "How to Haggle and Stay Firm: Barter as Hidden Price Discrimination" ***Economic Inquiry***, July, Vol. 26, no.3.

MANKIW, N. (1993) editor of "Symposium on Keynesian Economic Theory Today," ***Journal of Economic Perspectives***, Vol. 7, no. 1.

MANKIW, N. and SUMMERS, L. (1993) "Money Demand and the Effects of Fiscal Policies" ***Journal of Money Credit and Banking***, Vol. 18, No. 4 (Nov., 1986), pp. 415-429

MIEIERHOFER, L. (1984) ***Volkswirtsaftliche Analyse des WIR-Wirtschaftsrings***, WIR: Basel, Switzerland.

MITCHELL, B.R. (1998) ***International Historical Statistics, Europe, 1750-1993***, UK: MacMillan.

OECD (2000) ***Economic Outlook***, Jan., Paris: OECD.

_____ (1999) ***Economic Surveys: Switzerland***, Paris: OECD.

_____ (1998) ***Main Economic Indicators, Historical Statistics, 1960-97*** [computer file], Paris: OECD.

ONIONS, C.T., (1966) Editor, ***The Oxford Dictionary of English Etymology***, Oxford: Clarendon Press, 1995.

PATINKIN, Don (1956) ***Money, Interest and Prices: An Integration of Monetary and Value Theory***, Evanston, IL: Row, Peterson and Co.

PLATNER, SAMUEL B. (1929), ***A Topographical Dictionary of Ancient Rome***, London: Oxford University Press.

POLANYI, Karl (1947) ***The Great Transformation: the political and economic origins of our time***, Boston: Beacon Press, 1957.

ROMER, Paul (1986) "Increasing Returns and Long-Run Growth," ***Journal of Political Economy*** Vol. 94, no. 5 (October): pp. 1002-37.

RÖSL, Gerhard (2006) "Regional currencies in Germany – local competition for the Euro?" Discussion Paper, Series 1: Economic Studies No 43/2006, www.bundesbank.de/download/volkswirtschaft/dkp/2006/200643dkp_en.pdf

SHORT, Eugenie D (1979) "A New Look at Real Money Balances as a Variable in the Production Function ***Journal of Money, Credit, and Banking***, 11, August, pp. 326-39.

SIDRAUSKI, Miguel (1967) 'Rational Choice and Patterns of Growth in a Monetary Economy," ***American Economic Review***, Vol LVII, No 2, pp 534-544.

SKIDELSKY, Robert (1992) ***John Maynard Keynes: The Economist as Savior, 1920-37***, Vol. 2 of the author's 3 part biography, New York: Penguin.

SMALL BUSINESS ADMINISTRATION (1998) US Govt, "Financing Patterns of Small Firms: Findings from the 1998 Survey of Small Business Finance," www.smallbusinessnotes.com/fedgovernment/sba/financingpatterns03.html.

STARR, Ross M., (ed.) (1989) General Equilibrium Models of Monetary Economies: Studies in the Static Foundations of Monetary Theory, San Diego: Academic Press.

STERMAN, John, Rebecca M. Henderson, Eric D. Beinhocker, and Lee I. Newman, (February 2006). "Getting Big Too Fast: Strategic Dynamics with Increasing Returns and Bounded Rationality" ***MIT Sloan Research Paper*** No. 4595-06: http://ssrn.com/abstract=886784

STODDER, James (1998) "Corporate Barter and Macroeconomic Stabilization," ***International Journal of Community Currency Research***, Vol.2, http://www.le.ac.uk/ulmc/ijccr/vol1-3/2toc.htm.

_____ (1995) "The Evolution of Complexity in Primitive Economies: Theory," and "…Empirical Evidence," ***Journal of Comparative Economics***, Vol. 20: No. 1, February and No. 2, May.

STUDER, Tobias (1998) ***WIR in Unserer Volkwirtschaft***, Basel: WIR. An English translation of the non-statistical portion of this book is available as ***WIR and the Swiss National Economy*** (2006), translated by Philip H. Beard, Sonoma State University, Rohnert Park, California 94928. An E-Book version of this text is available at http://www.lulu.com/content/301348. The passages quoted in the present paper are taken from this translation.

STUTZ, Emil (1984) *"Le Cercle Économique-Societé Coopéreative WIR - Une Retrospective Historique,"* Basle: WIR.

TERRA, Maria Cristina (2003) "Credit constraints in Brazilian firms: evidence from panel data." ***Revista Brasilera de Economia***, Apr./June, vol.57, no.2, p.443-464.

TOBIN, James (1970) "Money and Income: Post Hoc Ergo Propter Hoc?," ***Quarterly Journal of Economics***, MIT Press, May, **84**(2), pp. 301-17.

WEITZMAN, Martin L (1982) "Increasing Returns and the Foundations of Unemployment Theory," ***Economic Journal***, **92(**368), (Dec.), pp. 787-804.

WENNINGER, John (1999) "Business-to-Business Electronic Commerce," ***Current Issues in Economics and Finance***, June, Volume 5, no. 10.

WINTER-EBMER, Rudolf, & Josef ZWEIMÜLLER (1999) "Firm Size Wage Differentials in Switzerland: Evidence from Job Changers," ***American Economic Review***, Papers and Proceedings, Vol. 89, No. 2, May, 89-93.

WINTER-EBMER, Rudolf (2001) "Firm Size, Earnings, and Displacement Risk," ***Economic Inquiry***, Vol. 39, No. 3, July, pp. 474-486.

WIR-Plus magazine, various issues, 2000-2007, www.wir.ch.

WIR (2005) E-mail statistics from Office of Public Relations, December.

WIR (2005) *Rapport de Gestion*, Various Years, Basle: WIR

WORLD BANK (2004) *World Development Indicators*, www.worldbank.org/data/wdi2004/index.htm.

_____(2000) "Future of Monetary Policy and Banking Conference: Looking Ahead to the Next 25 Years," July 11, 2000, World Bank, www.worldbank.org/research/interest/confs/upcoming/papersjuly11/papjuly11.htm.

Table 1: Participants, Total Turnover, Credit, and Credit/Turnover, WIR-Bank, 1948-2003
(Total Turnover and Credit Denominated in Millions of Current Swiss Franks)

Year	Participants	Turnover	Credit	Year	Participants	Turnover	Credit
1948	814	1.1	0.3	1976	23,172	223.0	82.2
1949	1,070	2.0	0.5	1977	23,929	233.2	84.5
1950	1,574	3.8	1.0	1978	24,479	240.4	86.5
1951	2,089	6.8	1.3	1979	24,191	247.5	89.0
1952	2,941	12.6	3.1	1980	24,227	255.3	94.1
1953	4,540	20.2	4.6	1981	24,501	275.2	103.3
1954	5,957	30.0	7.2	1982	26,040	330.0	127.7
1955	7,231	39.1	10.5	1983	28,418	432.3	159.6
1956	9,060	47.2	11.8	1984	31,330	523.0	200.9
1957	10,286	48.4	12.1	1985	34,353	673.0	242.7
1958	11,606	53.0	13.1	1986	38,012	826.0	292.5
1959	12,192	60.0	14.0	1987	42,227	1,065	359.3
1960	12,567	67.4	15.4	1988	46,895	1,329	437.3
1961	12,445	69.3	16.7	1989	51,349	1,553	525.7
1962	12,720	76.7	19.3	1990	56,309	1,788	612.5
1963	12,670	83.6	21.6	1991	62,958	2,047	731.7
1964	13,680	101.6	24.3	1992	70,465	2,404	829.8
1965	14,367	111.9	25.5	1993	76,618	2,521	892.3
1966	15,076	121.5	27.0	1994	79,766	2,509	904.1
1967	15,964	135.2	37.3	1995	81,516	2,355	890.6
1968	17,069	152.2	44.9	1996	82,558	2,262	869.8
1969	17,906	170.1	50.3	1997	82,793	2,085	843.6
1970	18,239	183.3	57.2	1998	82,751	1,976	807.7
1971	19,038	195.1	66.2	1999	82,487	1,833	788.7
1972	19,523	209.3	69.3	2000	81,719	1,774	786.9
1973	20,402	196.7	69.9	2001	80,227	1,708	791.5
1974	20,902	200.0	73.0	2002	78,505	1,691	791.5
1975	21,869	204.7	78.9	2003	77,668	1,650	784.4

Sources: Data to 1983 are from Meierhofer (1984). Subsequent years are from the annual *Rapport de Gestion* and communications with the WIR public relations department (2000, 2005). The first three series (Participants, Turnover, and Credit) are given in the annual report in French as *Nombre de Comptes-Participants, Chiffre (o Volume) d'Affaires,* and *Autres Obligations Financières envers Clients en WIR*, respectively. Both Turnover and Credit are denominated in Swiss Francs, but the obligations they represent are payable in WIR-accounts. In the regressions, all WIR and monetary series are deflated by the 2000 GDP deflator. More recent data have not been made available.

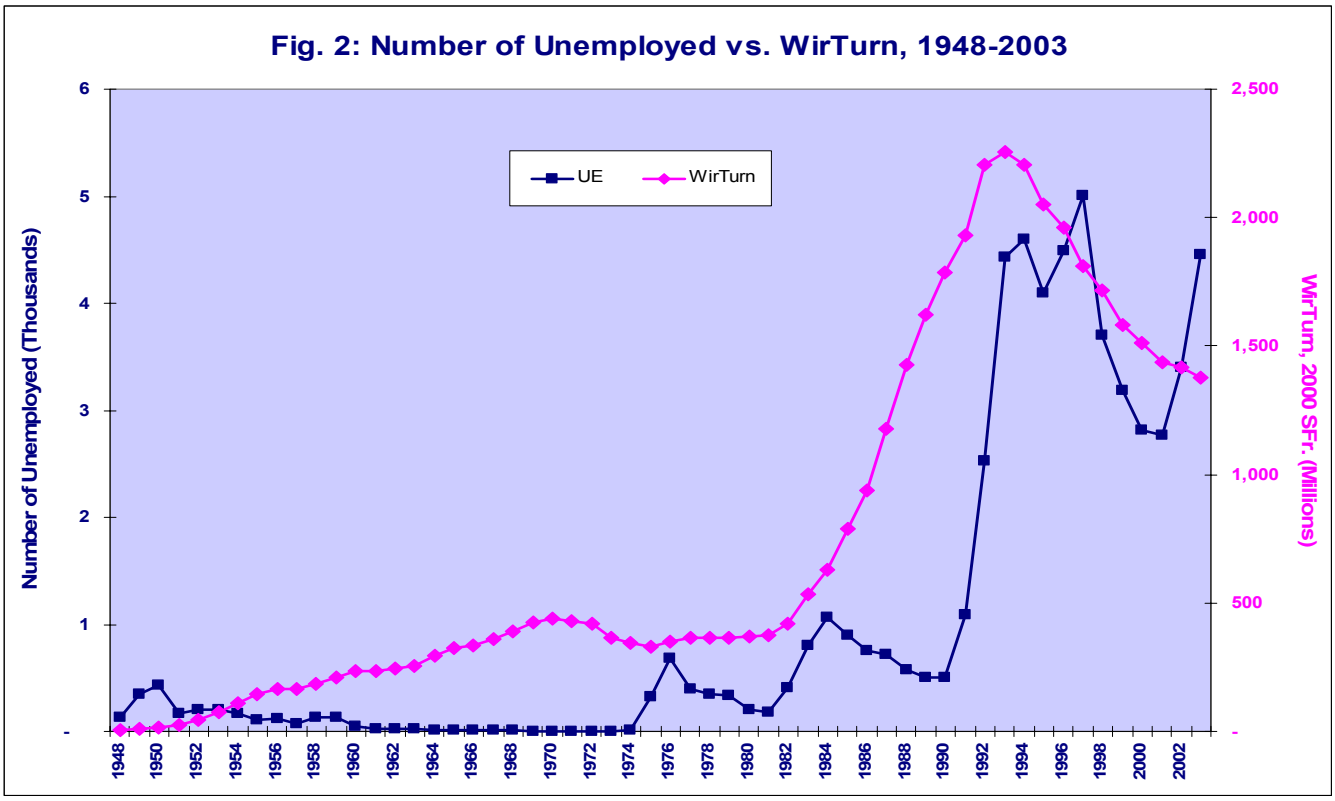

Figure 3: Granger Causality Relationships: Switzerland, 1950-2003

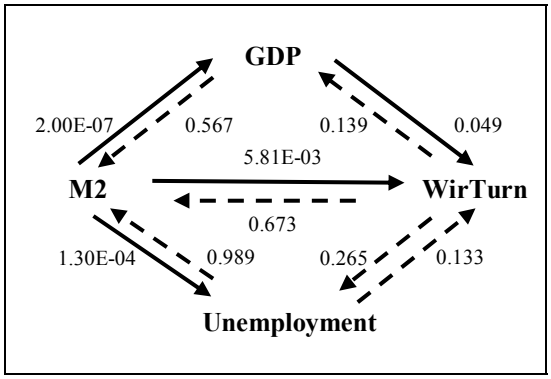

Note: Numbers are P-values on the null hypothesis of *no* Granger causality shown by directional arrow between variables. Solid arrows indicate that this null is rejected at 5 percent level; broken arrows show the null cannot be rejected at this level. Granger causality tests here are not on any particular regression, just on the log-normal form of the variables, with two lags. Granger/Wald Block Exogeneity tests are given in the paper's regression tables. All variables used in this paper are non-stationary in their levels.

Table 2: WIRTurn as Explained by GDP (*), 1951-2003

*t-statistics in [ ]; P-Values in { }; ***: p-val < 0.01, ** : p-val < 0.05, *: p-val <0.10; º: p-val <0.15*

Dependent Variable: lnWirTurn	**(A)** 1951-2003 N=53	**(B)** 1952-2003 N=52
Cointegrating Eq:		
lnWirTurn(-1)	1.000	1.0000
lnGDP(-1)	-3.553 [-7.32]***	
lnGDP_2AV(-1)		-8.265 [-1.42]
TIME Trend		-6.57E-02 [-8.01]***
Constant	38.155	-3.964
Independ.Variables:		
Cointegrating Eq.	-4.53e-02 [-2.39]**	-0.097 [-3.88]***
D(lnWirTurn(-1))	0.585 [4.37]***	0.529 [4.01]***
D(lnWirTurn(-2))	0.303 [2.29]**	0.241 [2.00]**
D(lnGDP(-1))	-0.781 [-1.99]*	
D(lnGDP(-2))	0.684 [1.96]*	
D(lnGDP_2Av(-1))		-1.205 [-2.49]**
D(lnGDP_2Av(-2))		-4.48E-01 [-0.94]
Constant	-2.48e-03 [-0.17]	0.008 [0.76]
R-squared	0.8382	0.8379
Adjusted R-squared	0.8210	0.8203
F-statistic	48.7044	47.5569
Log likelihood	73.8485	75.3046
Akaike AIC	-2.5603	-2.6656
Schwarz SC	-2.3373	-2.4404
(a) Johansen P-Values (*)	{0.0482}	{0.1313}
(b) Serial LM P-Value (*)	{0.5795}	{0.0891}
(c) Granger P-Value (*)	{0.0544}	{0.0287}

(*) Note: P-values {in curly brackets} are given for the null hypotheses of (a) no cointegration, (b) no serial correlation, and (c) no Granger Causality. For (a), the p-value reported is always the *higher* of the Johansen trace and eigenvalue tests. For (b), the Lagrange Multiplier p-value is for the number of lags in the particular ECM. For (c), the Granger Causality/Block Exogeneity Wald test, the p-value is for a Chi-squared on the joint significance of all lagged endogenous variables in the VAR portion of the regression, *except* the dependent variable from the error correction term.

.

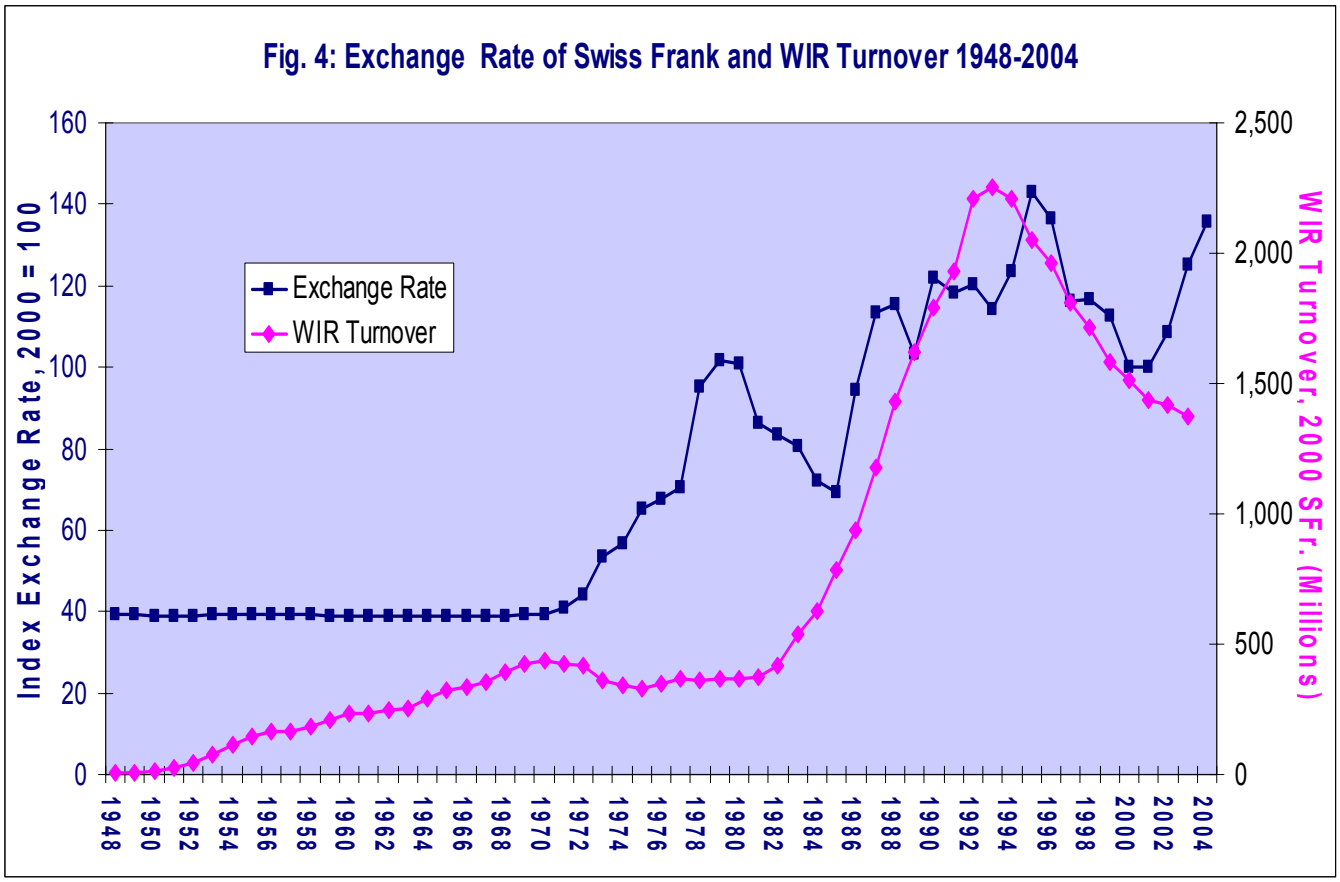
Fig. 4: Exchange Rate of Swiss Frank and WIR Turnover 1948-2004
Index Exchange Rate, 2000 = 100
WIR Turnover, 2000 SFr. (Millions)
Exchange Rate
WIR Turnover
0
20
40
60
80
100
120
140
160
0
500
1,000
1,500
2,000
2,500
1948
1950
1952
1954
1956
1958
1960
1962
1964
1966
1968
1970
1972
1974
1976
1978
1980
1982
1984
1986
1988
1990
1992
1994
1996
1998
2000
2002
2004

Table 3: WIR (WirTurn) as Explained by GDP, 1954-2003**

*t-statistics in [ ]; P-Values in { }; ***: p-val < 0.01, ** : p-val < 0.05, *: p-val <0.10; º: p-val <0.15*

Dependent Variable: lnWirTurn	**(A) 1954-1972** N = 19	**(B) 1954-1972** N = 19	**(C) 1973-2003** N = 31	**(D) 1973-2003** N = 31
Cointegrating Eq:				
LnWirTurn(-1)	1.000	1.000	1.000	1.000
LnGDP(-1)	-1.310	-4.330	-4.895	-13.295
	[-10.47]***	[-3.23]***	[-19.63]***	[-3.34]***
TIME Trend		0.132		0.119
		[2.16]**		[2.08]**
Constant	10.428	44.982	55.547	157.644
Independent Variables:				
Cointegrating Eq	-0.615	-0.678	-0.195	-0.111
	[-3.10]**	[-2.62]*	[-2.50]***	[-1.75]*
D(LnWirTurn(-1))	0.226	0.290	0.517	0.664
	[1.00]	[1.19]	[2.44]***	[2.96]***
D(LnWirTurn(-2))	-0.351	-0.532	0.601	7.45e-01
	[-1.32]	[-1.54]	[2.60]**	[2.91]***
D(LnWirTurn(-3))	0.124	0.135	9.41e-03	-0.141
	[0.65]	[0.65]	[0.03]	[-0.39]
D(LnWirTurn(-4))	-1.38e-02	-0.012	-0.053	-0.348
	[-0.07]	[-0.06]	[-0.17]	[-1.20]
D(LnWirTurn(-5))	-3.12e-02	0.107	0.288	0.212
	[-0.25]	[0.71]	[1.28]	[0.88]
D(LnGDP(-1))	-0.461	-1.670	-1.793	-1.925
	[-0.84]	[-2.10]*	[-2.98]***	[-2.72]**
D(LnGDP(-2))	-1.618	-3.001	0.104	0.337
	[-2.56]**	[-2.92]**	[0.14]	[0.41]
D(LnGDP(-3))	-7.17e-02	-1.191	-0.300	-0.262
	[-0.09]	[-0.99]	[-0.47]	[-0.37]
D(LnGDP(-4))	-0.389	-1.351	-0.143	-0.380
	[-0.58]	[-1.39]	[-0.20]	[-0.46]
D(LnGDP(-5))	0.753	0.470	-0.547	-1.117
	[1.88]	[1.11]	[-1.02]	[-1.85]*
Constant	0.1861	0.3927	0.021	4.50e-02
	[2.08]*	[2.28]*	[1.44]	[1.86]*
R-squared	0.9372	0.9247	0.8767	0.8588
Adj. R-squared	0.8385	0.8065	0.8053	0.7770
F-statistic	9.4932	7.8186	12.2793	10.5031
Log likelihood	44.1055	42.3887	58.7537	56.6519
Akaike AIC	-3.3795	-3.1988	-3.0164	-2.8808
Schwarz SC	-2.7830	-2.6023	-2.4613	-2.3257
(a) Johansen P-Values	{0.0185}	{0.0603}	{0.0279}	{0.0396}
(b) Serial LM P-Value	{0.9170}	{0.9037}	{0.5294}	{0.8724}
(c) Granger P-Value (*)	{0.0158}	{0.0063}	{0.0019}	{0.0073}

(**) Note: See Table 2.

Table 4: Turnover in the WIR Exchange Network,
as Explained by Number of Unemployed, 1952-2003(**)
t-statistics in [ ]; P-Values in { };***: p-val < 0.01, ** : p-val < 0.05, *: p-val <0.10; º: p-val <0.15*

Dependent_Variable: lnWirTurn	**(A) 1952-2003** N = 21	**(B) 1952-2003** N = 21
Cointegrating Eq:		
LnWirTurn(-1)	1.000	1.000
LnUE(-1)	0.226 [5.81]***	0.463 [1.985]º
TIME Trend		5.90e-02 [1.02]
Constant	-5.263	-6.117
Independ. Variables:		
Cointegrating Eq	-0.278 [-7.48]***	-0.253 [-7.45]***
D(LnWirTurn(-1))	0.304 [2.36]**	0.317 [2.46]**
D(LnWirTurn(-2))	-0.029 [-0.20]	-3.32e-02 [-0.23]
D(LnWirTurn(-3))	-0.146 [-1.35]	-0.187 [-1.71]º
D(LnUE(-1))	7.44e-02 [2.85]***	0.111 [4.01]***
D(LnUE(-2))	7.05e-02 [3.16]***	9.39e-02 [4.10]***
D(LnUE(-3))	2.73e-02 [1.22]	4.05e-02 [1.81]º
Constant	0.159 [6.22]***	0.182 [6.54]***
R-squared	0.9620	0.9617
Adj. R-squared	0.9415	0.9412
F-statistic	46.9655	46.6935
Log likelihood	42.0302	41.9715
Akaike AIC	-3.2410	-3.2354
Schwarz SC	-2.8431	-2.8375
(a) Johansen P-Values	{0.0000}	{0.0002}
(b) Serial LM P-Value	{0.1754}	{0.2270}
(c) Granger Causality	{0.0030}	{0.0000}

(**) Note: See Table 2.

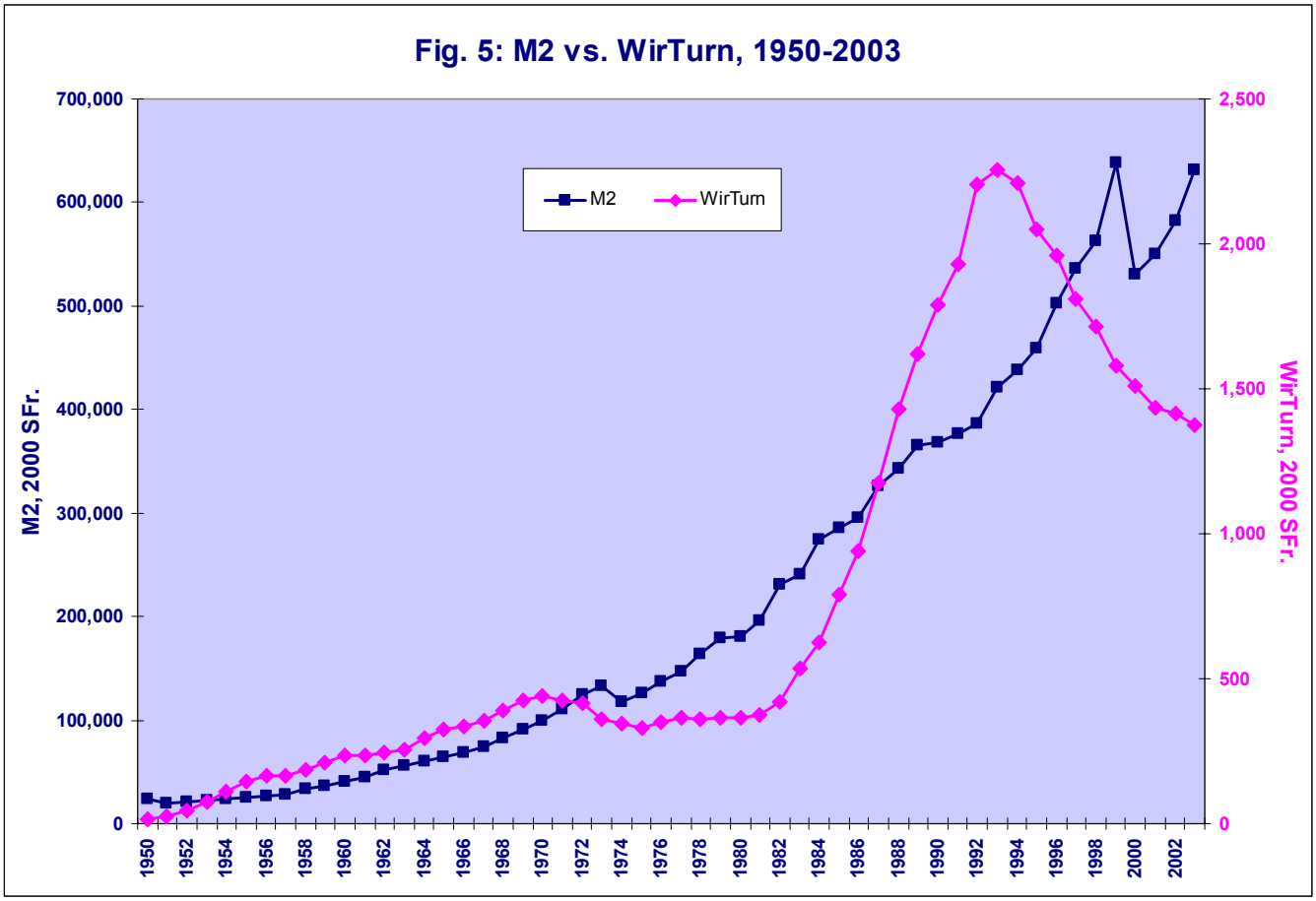
Fig. 5: M2 vs. WirTurn, 1950-2003
M2
WirTurn
M2, 2000 SFr.
WirTurn, 2000 SFr.
700,000
600,000
500,000
400,000
300,000
200,000
100,000
0
2,500
2,000
1,500
1,000
500
0
1950
1952
1954
1956
1958
1960
1962
1964
1966
1968
1970
1972
1974
1976
1978
1980
1982
1984
1986
1988
1990
1992
1994
1996
1998
2000
2002

Table 5: Turnover in the WIR Exchange Network,
as Explained by Number of Unemployed, 1952-2003(**)
t-statistics in [ ]; P-Values in { };***: p-val < 0.01, ** : p-val < 0.05, *: p-val <0.10; º: p-val <0.15*

Dependent Variable: lnWirTurn	**(A) 1952-1972** N = 21	**(B) 1952-1972** N = 21	**(C) 1973-2003** N = 31	**(D) 1973-2003** N = 31
Cointegrating Eq:				
LnWirTurn(-1)	1.000	1.000	1.000	1.000
LnUE(-1)	0.226 [5.81]***	0.463 [1.985]º	-0.368 [-8.84]***	-0.268 [-3.10]**
TIME Trend		5.90e-02 [1.02]		-2.11e-02 [-1.04]
Constant	-5.263	-6.117	-5.653	-5.100
Independ. Variables:				
Cointegrating Eq	-0.278 [-7.48]***	-0.253 [-7.45]***	-5.13e-02 [-2.19]**	-6.76e-02 [-2.54]**
D(LnWirTurn(-1))	0.304 [2.36]**	0.317 [2.46]**	0.544 [2.74]**	0.503 [2.57]**
D(LnWirTurn(-2))	-0.029 [-0.20]	-3.32e-02 [-0.23]	0.430 [2.03]*	0.460 [2.25]**
D(LnWirTurn(-3))	-0.146 [-1.35]	-0.187 [-1.71]º	-0.105 [-0.49]	-5.86e-02 [-0.27]
D(LnUE(-1))	7.44e-02 [2.85]***	0.111 [4.01]***	1.95e-02 [1.38]	2.45e-02 [1.88]*
D(LnUE(-2))	7.05e-02 [3.16]***	9.39e-02 [4.10]***	-1.85e-02 [-1.27]	-1.57e-02 [-1.15]
D(LnUE(-3))	2.73e-02 [1.22]	4.05e-02 [1.81]º	-2.19e-02 [-1.50]	-2.20e-02 [-1.62]º
Constant	0.159 [6.22]***	0.182 [6.54]***	9.82e-03 [0.85]	6.65e-03 [0.60]
R-squared	0.9620	0.9617	0.8132	0.8340
Adj. R-squared	0.9415	0.9412	0.7563	0.7835
F-statistic	46.9655	46.6935	14.3011	16.5077
Log likelihood	42.0302	41.9715	52.3147	54.1469
Akaike AIC	-3.2410	-3.2354	-2.8590	-2.9772
Schwarz SC	-2.8431	-2.8375	-2.4890	-2.6072
(a) Johansen P-Values	{0.0000}	{0.0002}	{0.0024}	{0.0156}
(b) Serial LM P-Value	{0.1754}	{0.2270}	{0.8387}	{0.6957}
(c) Granger Causality	{0.0030}	{0.0000}	{0.0352}	{0.0332}

(**) Note: See Table 2.

Table 6: Turnover in the WIR Exchange Network,
as Explained by Swiss Money Supply (M2), 1953-2003**
t-statistics in [ ]; P-Values in { };***: p-val < 0.01, ** : p-val < 0.05, *: p-val <0.10; º: p-val <0.15*

Dependent Variable: lnWirTurn	**(A) 1953-1972** N = 20	**(B) 1953-1972** N = 20	**(C) 1973-2003** N = 31	**(D) 1973-2003** N = 31
Cointegrating Eq:				
LnWirTurn(-1)	1.000	1.000	1.000	1.000
LnM2(-1)	-0.657	-71.235	-1.003	-6.655
	[-13.62]***	[-4.89]***	[-7.40]***	[-7.84]***
TIME Trend		6.553		0.341
		[4.87]***		[6.53]***
Constant	1.571	658.048	5.822	62.912
Independent Variables:				
CointEq	-0.630	-2.05e-02	-0.127	-0.219
	[-3.17]***	[-2.20]*	[-2.53]**	[-4.17]***
D(LnWirTurn(-1))	0.435	0.130	0.595	0.393
	[1.82]*	[0.38]	[3.21]**	[2.30]**
D(LnWirTurn(-2))	-0.177	-0.221	0.382	0.161
	[-0.60]	[-0.63]	[1.53]	[0.72]
D(LnWirTurn(-3))	-0.330	-0.347	-0.188	-3.41e-02
	[-1.12]	[-0.95]	[-0.77]	[-0.16]
D(LnWirTurn(-4))	0.012	0.257	0.249	5.49e-02
	[0.08]	[1.35]	[1.30]	[0.40]
D(LnM2(-1))	-0.551	-0.904	-6.54e-02	-0.988
	[-1.14]	[-1.57]º	[-0.43]	[-3.60]***
D(LnM2(-2))	-0.437	-0.428	-0.281	-1.129
	[-0.81]	[-0.63]	[-1.80]*	[-4.21]***
D(LnM2(-3))	-0.849	-1.188	-3.14e-02	-0.711
	[-1.74]	[-1.81]*	[-0.19]	[-2.90]**
D(LnM2(-4))	-0.106	-0.752	0.239	-3.33e-01
	[-0.33]	[-1.78]º	[1.02]	[-1.24]
Constant	0.269	0.366	2.30e-03	0.194
	[2.97]**	[2.53]**	[0.09]	[3.40]***
R-squared	0.8353	0.7687	0.8527	0.8949
Adj. R-squared	0.6500	0.5085	0.7896	0.8499
F-statistic	4.5082	2.9546	13.5084	19.8727
Log likelihood	38.8269	35.7714	56.0004	61.2350
Akaike AIC	-3.2030	-2.8635	-2.9678	-3.3055
Schwarz SC	-2.7083	-2.3688	-2.5052	-2.8429
(a) Johansen P-Values	{0.0160}	{0.0052}	{0.2798}	{0.0024}
(b) Serial LM P-Value	{0.7617}	{0.4349}	{0.1252}	{0.8106}
(c) Granger Causality	{0.0935}	{0.0394}	{0.1480}	{0.0000}

(**) Note: See Table 2